Installation Manual

PC51O

Software Version 1.O

• W A R N I N G •

This manual contains information on limitations regarding product use and function and information on the limitations as to liability of the manufacturer. The entire manual should be carefully read.

TABLE OF CONTENTS

INTRODUCTION *2*
Features 2
Specifications 2

INSTALLATION *3*
Mounting the Panel 3
Mounting the Keypad 3
Wiring 4
Burglary Zone Wiring 4
Auxiliary Power Connection 4
PGM Terminal Connections 4
AC Power Wiring 4
Battery Connection 4
KEY Terminal Connection 4

KEYPAD FUNCTIONS *5*
Introduction 5
Master Code 5
Installer's Programming Code 5
Arming 5
Auto-Bypass/Home-Away Arming 5
At-Home Arming 5
Disarming 6
[✻]+[0]: Quick-Arm 6
[✻]+[1]+[Access Code]: Zone Bypassing 6
[✻]+[2]: Display Trouble Conditions 6
[✻]+[3]: Display Alarm Memory 6
[✻]+[4]: Bell Test 6
[✻]+[5]+[Master Code]: Program Access Codes 7
[✻]+[6]: Door Chime On/Off 7
[✻]+[7]: Utility Output Command 7
[✻]+[8]+[Installer's Code]: Installer's Programming Command 7
[✻]+[9]+[Access Code]: At-Home Arming 7
Keypad Zones 8
Adjusting the Keypad Sounder Tone and Backlighting 8

PROGRAMMING GUIDE *9*
Section [5]: Enabling System Functions 9
Resetting Programming to the Factory Default Settings 9

PROGRAMMING SECTIONS *10*
[1] Zone Definitions 10
[2] System Times 11
[3] Installer's Code 11
[4] Programmable Output Options (PGM1 and PGM2 Terminals) 11
[5] 1st System Option Code 12

FOR THE RECORD *13*

PROGRAMMING WORKSHEET *14*

HOOK-UP DIAGRAM *15*

LIMITED WARRANTY *16*

FEATURES

- Fully featured security system with Trouble Supervision, Alarm Memory, Master Code and 3 programmable Access Codes, Quick-Arming and At-Home Arming, Door Chime, 3 one-touch Keypad Zones, and more
- 4 End-of-Line Resistor Supervised Zones
- 6 Programmable Zone Types with Fast and Slow response times and Silent or Audible alarms
- 2 Programmable Outputs with 9 options
- Momentary or Maintained Keyswitch Arming
- All Installer's Programming is performed at the keypad
- EEPROM memory retains all programming even after all power is removed from the control panel
- Advanced static and lightning protection; unique "Zap-Trac" circuit board design stops damaging voltages at the wiring terminals, and transient protection devices are placed in all critical areas for further protection

SPECIFICATIONS

PC510 Control Panel

- Four fully programmable zones
- Zones are End-of-Line Resistor supervised
- Maximum zone loop resistance: 100 ohms
- Bell/Siren Output: fused for 5A
- Bell/Siren Alarms: steady and pulsed alarms
- Programmable Output: 50 mA with 9 options
- Auxiliary Power Output:
  - 800 mA with 40 VA transformer
  - 500 mA with 20 VA transformer
- Maximum 3 Keypads per system and Keyswitch operation
- Required Battery: 12 VDC
  - 1.2 Ah provides 4 hours of stand-by at 200 mA Auxiliary Output
  - 4.0 Ah provides 4 hours of stand-by at 800 mA Auxiliary Output
- Required Transformer: 16 VAC, 20 - 40 VA
- Panel dimensions: 7" high × 9" wide × 3" deep (178 × 229 × 76 mm)
- Panel Colour: light beige

SL-40 Keypad

- 12-key keypad
- Three one-touch Zones: [F], [A], [P]
- 3 Status Lights: Ready, Armed, System
- 4 Zone Lights
- All new slimline design
- Keypad dimensions: 4.75" high × 2.75" wide × 1.2" deep (120mm × 70mm × 30mm)
- Keypad Colour: Designer White with Grey display

PC500RK Keypad

- 12-key keypad
- Three one-touch Zones: [F], [A], [P]
- 3 Status Lights: Ready, Armed, System
- 4 Zone Lights
- Nominal current consumption: 30 mA
- Keypad dimensions: 4.5" high × 4.5" wide × 1" deep (114mm × 114mm × 25.4mm)
- Keypad Colour: Mist

INSTALLATION

Mounting the Panel

Select a dry location close to an unswitched AC source and a ground connection.

Remove the printed circuit board, mounting hardware and keypad from the cardboard retainer inside the control panel cabinet. Before attaching the cabinet to the wall, press the four white nylon printed circuit board mounting studs into the raised mounting holes from the back of the cabinet. Also, secure the ground screw to a hole in the cabinet.

Hold the cabinet in position and pull all wires into the cabinet. Mount the cabinet securely to the wall using the mounting screws provided. It is recommended that appropriate wall anchors be used when securing the panel cabinet to drywall, plaster, concrete, brick or other similar surfaces.

Press the PC510 Control Panel onto the nylon mounting studs. Pull all cables into the cabinet and prepare them for connection.

Mounting the Keypad

The PC510 Control Panel is controlled by the SL-40 or PC500RK Keypad. The Keypad should be located close to the designated “Entry-Exit” door and mounted at a height convenient for all users.

Refer to the illustrations for the keypad included with your control panel. Disassemble the keypad by pressing gently on the locking tab found on the bottom of the unit. With the tab disengaged, pull the backplate from the keypad.

Prepare a hole in the wall at the desired location and pull the keypad wiring through the hole. Hold the backplate in position and pull the wires through the large opening in the backplate. Mount the backplate to the wall using the hardware provided; it is recommended that plastic wall anchors be used. When mounting the backplate, ensure that it is straight and level.

Prepare all wires for connection and connect the keypad wires to the in-wall wiring; refer to the Wiring Diagram in the back of this manual.

Align the keypad with the mounting tabs on the top of the backplate. With the top mounting tabs engaged, swing the keypad down and engage the bottom locking tab. Ensure that the top mounting tabs and the bottom locking tab are securely engaged.

SL-40 Keypad

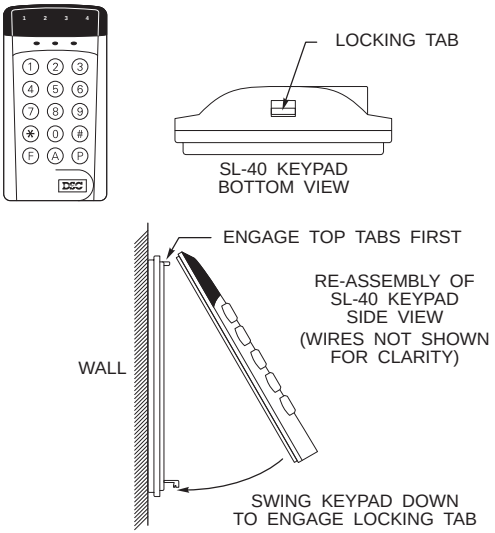

PC500RK Keypad

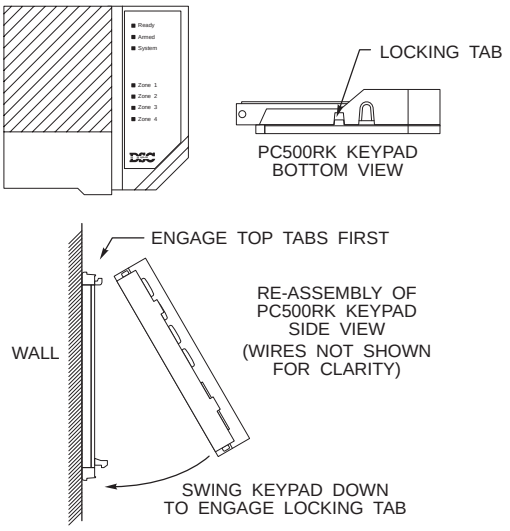

Wiring

NOTE: Complete all wiring to the control panel before applying battery or AC power.

Burglary Zone Wiring

Burglary zone definition, (for example, Delay, Instant, 24-Hour, and so on) is programmed using the keypad. Refer to Programming Guide Section [1].

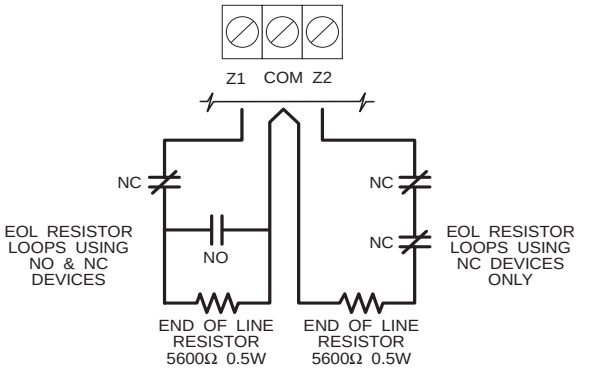

Burglary Zone Wiring Chart

Wire Gauge	Maximum wire length to End of Line Resistor (feet/meters)
24	1900 / 579
22	3000 / 914
20	2400 / 1493
19	6200 / 1889
18	7800 / 2377

Figures are based on maximum wiring resistance of 100 ohms.

Auxiliary Power Connection

The Auxiliary Power Supply can be used to power motion detectors and other devices that require 12 VDC. The total load for the Auxiliary Power Supply must be calculated for all devices connected across the AUX +/– terminals and for devices connected between the AUX + and PGM terminals. The output current cannot exceed 800 mA.

PGM Terminal Connections

The PGM terminal is a switched negative output which can be controlled by various programming options; refer to Programming Guide Section [4]. Devices controlled by the PGM output must be connected between the PGM terminal and the AUX+ terminal.

AC Power Wiring

Complete all wiring to the control panel before connecting AC power or the battery. The transformer should not be connected to an outlet that is controlled by a switch.

Battery Connection

If the battery is connected in reverse, the 5 A battery fuse will open and will need to be replaced. The battery charging voltage is factory set and normally needs no adjustment.

If AC power is OFF and the battery voltage drops to approximately 9.5 V or lower, the battery will be automatically disconnected and the panel will power down. To power up again, AC power will have to be re-established. This feature is designed to prevent damage to the battery due to prolonged discharging.

KEY Terminal Connection

The KEY terminal may be programmed for keyswitch operation or for use as a tamper zone. Refer to the Hook-up Diagram for instructions on wiring the KEY terminal.

KEYPAD FUNCTIONS

Introduction

The Keypad provides complete control of the PC510 security system. The system can be completely programmed from the keypad. The 4 zone lights provide alarm and status indication for the alarm circuits, and three function lights advise the user of system status. The built-in sounder lets the user hear correct key entries and other alert signals. Keypad alarms may be activated by pressing and holding the [F], [A] or [P] Keys. Note that all keypad entries are made by pressing one key at a time.

Master Code

A default Master Code “1234” is factory programmed into the PC510. The Master Code is used to arm and disarm the system, to reset the sounder after an alarm, to program additional Access Codes, and to perform other user functions. The Master Code may be changed by using the [∗][5][Master Code] Program Access Codes command.

Installer’s Programming Code

A default Installer’s Programming Code “0510” is programmed into the PC510. Using this code and the [∗][8] command, the installer can perform programming functions. This code should be changed by the installer after the system is installed; refer to Programming Section [3].

Arming

Before arming the system, close all protected doors and windows and stop movement in areas covered by motion detectors. If the “System” light is on, check for trouble conditions (refer to [∗][2]: Display Troubles) and correct the condition. Ensure that any bypassed zones are bypassed intentionally; refer to [∗][1][Access Code]: Bypass Zones. If the “Ready” light is not on, one or more zones are open; the system can only be armed when the “Ready” light is ON.

To arm the system, enter a 4-digit Access Code. As each digit is entered, the keypad sounder will beep. When the Access Code has been entered, the “Armed” light will come ON and the keypad will beep 6 times. If the Access Code has been entered incorrectly, the keypad will sound a single long tone; press the [#] Key and enter the Access Code again.

When an Access Code has been entered and the “Armed” light is ON, leave the premises through the designated Entry-Exit door before the Exit Delay expires. At the end of the Exit Delay, all lights on the keypad will be shut OFF except for the “Armed” light.

The default setting for the Exit Delay is 120 seconds. Refer to Programming Section [1] Zone Definitions for information on zone types that are affected by the Exit Delay. Also refer to Programming Section [2] for instructions on changing the Exit Delay.

Auto-Bypass/Home-Away Arming

If an Access Code is entered and the Exit-Entry zone is not activated, the system will arm with interior zones automatically bypassed if those zones have been programmed as Home-Away Zones.

This feature is designed for the user who wishes to remain at home with the system armed. When this feature is enabled, the user does not have to manually bypass zones programmed as Home-Away zones.

At-Home Arming

To eliminate the Entry Delay, arm the system by entering [∗][9][Access Code]; an exit through a Delay Zone may then be made as in normal arming. The system will arm as described above in Auto-Bypass/Home-Away arming whether an exit is made or not. The “Armed” light will FLASH to indicate that the system is armed and that there is no entry delay on any of the Delay Zones. If any zone other than a Home-Away zone is activated, an alarm will sound immediately.

Disarming

Enter the premises through the designated Entry-Exit door. The keypad will sound a tone to indicate that the system must be disarmed. Go to the keypad and enter an Access Code. If an error is made entering the code, press the [#] Key and enter the code again. The "Armed" light will be shut OFF and the sounder will be silenced. An Access Code must be entered before the Entry Delay expires or an alarm will sound. To change the Entry Delay, refer to Programming Section [2].

If an alarm occurred while the system was armed, the "System" light and the zone lights of the zones that went into alarm will FLASH for two minutes. Press the [#] Key to cancel the flashing display and to return the system to the "Ready" mode. Refer to [∗][3]: Alarm Memory Display.

[∗]+[0]: Quick-Arm

The Quick-Arm feature allows a user to enter [∗][0] to arm the system. This command is designed to allow someone to arm the system without that person having to be provided with an Access Code. When [∗][0] is entered, the Exit Delay will begin and the user may exit the premises through the Entry/Exit door. At the end of the Exit Delay, the system will be fully armed.

[∗]+[1]+[Access Code]: Zone Bypassing

A bypassed zone will not cause an alarm. Use zone bypassing when access is needed to part of a protected area when the system is armed, or if damage to sensors or wiring cannot be repaired immediately. The system may be armed with one or more zones bypassed even if the zones are open.

With the system disarmed, enter [∗][1][Access Code] to display the bypassed zones; the zone lights of bypassed zones will come ON. Ensure that any zone displayed as being bypassed is intentionally bypassed. Zone bypasses are automatically cancelled when the system is disarmed.

To Bypass Zones:

Enter [∗][1][Access Code]; the "System" light will FLASH.

Enter the number of the zone to be bypassed; the corresponding zone light will come ON to indicate that the zone is bypassed. To remove a bypass, enter the zone number and its zone light will be shut OFF. When all desired zones are bypassed, press the [#] Key to return to "Ready".

[∗]+[2]: Display Trouble Conditions

The PC510 monitors two possible trouble conditions. If an AC Failure occurs, the "System" light will come ON. If both the AC Failure and Battery Trouble are present, the "System" light will come ON and the keypad sounder will sound two short beeps every 10 seconds. To silence the sounder, press the [#] Key; the sounder will be silenced but the "System" light will remain ON until the AC Failure trouble is cleared.

To display trouble conditions, enter [∗][2]. Trouble conditions are represented with the zone lights; if a zone light comes ON, then that trouble condition is present:

Zone Light

1 **Battery Trouble.** If the battery voltage is low, a battery trouble will be displayed. Note that the Battery Trouble will only be indicated if AC power is off.

2 **AC Failure.** If AC power is removed from the system, an AC trouble will be displayed.

[∗]+[3]: Display Alarm Memory

Alarms caused during the previous armed period are stored in memory. To display the zones that went into alarm, enter [∗][3]. The "System" light will FLASH and the alarms will be displayed on the flashing zone lights. The Alarm Memory will be cleared when the system is armed.

[∗]+[4]: Bell Test

Entering [∗][4] will sound the siren and turn ON all the keypad lights for 2 seconds.

[∗]+[5]+[Master Code]: Program Access Codes

The [∗][5][Master Code] command allows the user to program the Master Code and 3 additional Access Codes.

Enter [∗][5][Master Code]. The "Ready", "Armed" and "System" lights will FLASH and the zone lights will indicate which Access Codes have been programmed and which Access Code is presently being programmed:

Zone Light	***Access Code is...***
OFF	not programmed
ON steady	programmed
Flashing	presently being programmed

When the [∗][5][Master Code] command is entered, Zone Light 1 will be ON to indicate that the Master Code is programmed with the factory default code.

Changing or Adding a Code

To change Access Codes 1 to 4, enter the number of the code to be changed; the corresponding zone light will begin to FLASH. Enter a new 4-digit Access Code; ***do not press [∗] or [#] when entering the code.*** After the code is entered, the keypad will beep 6 times and the zone light will stop flashing and remain ON. If an existing code is being changed, the new code will replace the old one. If another code is to be changed, press the number key for the code to be programmed and enter the new 4-digit code. When all desired changes are complete, press the [#] Key to return to "Ready".

Erasing a Code

To erase a code, enter [∗][5][Master Code]. Enter the number of the code to be erased; the zone light for the code will FLASH. Enter [∗∗∗∗] to erase the Access Code. **NOTE:** Do not erase the Master Code. If the Master Code is accidentally erased, reset the system's programming to the factory default settings. Refer to "Reset to Factory Default" for instructions on restoring the system's factory default programming.

[∗]+[6]: Door Chime On/Off

The Door Chime feature causes the keypad to beep whenever a Delay or Instant Zone is activated. This feature is useful if the Entry/Exit door or doors are out of view, and the user desires an indication of when the door zones are opened and closed. The Door Chime feature only functions when the system is disarmed.

To turn the Door Chime feature on or off, enter [∗][6]. If the feature is being turned ON, the keypad sounder will beep 3 times. If the feature is being turned OFF, the sounder will emit a single long tone.

[∗]+[7]: Utility Output Command

The PGM1 and PGM2 Outputs may be programmed to be activated by entering a keypad command. Refer to Section [4] for information on programming the PGM Output Options. If the keypad command is selected, entering [∗][7] on the keypad will activate the keypad sounder and the PGM output for 5 seconds.

This feature can be used to operate devices such as door strikes or special lighting.

[∗]+[8]+[Installer's Code]: Installer's Programming Command

The PC510 is programmed from the keypad by using commands in the [∗][8] section. These commands are described in detail in the Programming Section of this manual. The default Installer's Code is [0510].

[∗]+[9]+[Access Code]: At-Home Arming

Entering [∗][9] before entering an Access Code will arm the system and remove the Entry Delay from the Delay Zones. All "Home-Away" zones will be automatically bypassed. When the system is armed using the [∗][9][Access Code] command, the "Armed" light will FLASH to remind the user that the Entry/Exit zones do not have the Entry Delay. This command allows the user to remain on the premises and have an instant alarm on the entry doors.

Important Note about Keypad [✻] Commands

The [✻] commands will not function when the system is disarmed and the bell or siren is active. In order to use the [✻] functions, an Access Code must first be entered to silence the alarm.

Keypad Zones

Three types of alarm may be activated by pressing and holding a single key on the keypad. Note that the [A] Key alarm is silent, and the [P] Key alarm may be either silent or audible. Silent alarms should not be used unless they are programmed to activate the Programmable Outputs, otherwise no alarm indication will be generated when these keys are pressed.

[F] Press and hold the [F] Key for 2 seconds to sound an [F] Key alarm; the siren will sound a pulsed tone. The keypad will sound a series of short beeps once the system has accepted the alarm.

[A] Press and hold the [A] Key for 2 seconds to generate an [A] Key alarm; the siren will not sound when this function is activated. The keypad will sound a series of short beeps once the system has accepted the alarm. Refer to Programming Section [4] for information on programming one of the Programmable Outputs to be activated when this key is pressed.

[P] Press and hold the [P] Key for 2 seconds to generate a [P] Key alarm. This alarm may be programmed as either silent or audible; refer to Programming Section [5]. When programmed as “audible”, the keypad will sound a series of short beeps once the system has accepted the alarm, and the siren will sound a steady tone. Refer to Programming Section [4] for information on programming one of the Programmable Outputs to be activated when this key is pressed.

Adjusting the Keypad Sounder Tone and Backlighting

The sounder tone and the lighting behind the keys for each Keypad may be individually adjusted. The sounder tone may be set with a loud tone, a softer tone, or no tone at all. The backlighting can be set at medium or high brightness, or it may be turned off.

To adjust the Keypad’s sounder, press and hold the [#] Key; after two seconds, the sounder will begin to beep. With each beep, the tone of the beep will increase or decrease. When the desired tone is achieved, release the [#] Key.

To adjust the Keypad’s backlighting, press and hold the [✻] Key. The zone and status lights will be shut off, and the Keypad will beep as each of the three backlighting levels is shown: medium, high and off. When the desired level is reached, release the [✻] Key. Press the [#] Key to return to the “Ready” mode.

If all power to the system is shut off, each Keypad’s tone and backlighting will be restored to the factory settings.

With the system disarmed, enter [*][8][Installer's Code]. The system can only be programmed while it is disarmed. The default Installer's Code is [0510]. The Installer's Code should be changed after the system is installed; refer to Programming Section [3].

When the Installer's Programming Command is entered, the "Armed" light will be ON and the "System" light will FLASH to indicate that the system is ready for programming. **NOTE:** If no key entry is made for 2 minutes, the system will return to the "Ready" mode and the Installer's Programming Command will have to be entered again.

With the "Armed" light ON and the "System" light flashing, enter a digit from 1 to 5 to select a Section to program. Note that each section is programmed independently.

Once the section to be programmed is entered, the keypad will beep 3 times; the "Ready" light will come ON, the "Armed" light will be OFF, and the "System" light will FLASH. The system is now ready to accept data for the selected section.

To change the first digit in a section, enter a new digit from the keypad. If you wish to keep the first digit unchanged, enter the same number. After entering the first digit, enter the second digit by pressing a number on the keypad.

After entering the data, press the [#] Key to return to the programming mode. You may then enter another Section for programming. For 2-digit numbers, both digits must be programmed before pressing the [#] Key. Only the data entered before pressing the [#] Key will be changed.

When all data for a section is completely entered, the keypad sounder will beep several times to indicate that all expected data has been entered. When a section is completely programmed, enter the number of the next section to be programmed.

Section [5]: Enabling System Functions

Section [5] allows you to enable or disable various system functions. Refer to the Programming Worksheet to see which features are represented by the Zone Lights. Press the number key corresponding to the desired feature to turn the Zone Light ON or OFF. When all selections have been made, press the [#] Key to save the changes and return to the program mode.

Resetting Programming to the Factory Default Settings

The system may be reset to its factory default programming by following this procedure:

1. Remove all power, AC and battery, from the PC510
2. Remove all wiring connections from the PGM1 and Zone 1 terminals
3. Connect the PGM1 and Zone 1 terminals together
4. Apply power to the PC510 and wait for 10 seconds
5. After approximately 10 seconds, the keypad sounder will beep and Zone Light 1 will come ON
6. Remove all power, AC and battery, from the PC510
7. Remove the connection between the PGM1 and Zone 1 terminals
8. Re-connect original wiring to the PGM1 and Zone 1 terminals
9. Restore power to the PC510; the Programming Sections have now been restored to the factory default settings

[1] Zone Definitions

Enter four 2-digit numbers in this section to determine the operating characteristics of each zone.

Zone Definitions: Digit 1

The first digit of each Zone Definition determines each zone's audible alarm characteristics and response speed. When programmed as *audible,* the siren will sound on alarm; when programmed as *silent,* the siren will not sound on alarm. When silent alarms are used, Programmable Output Option [3] should be used to activate a programmable output when an alarm is generated. If silent alarms are not followed with a programmable output activation, there will be no alarm indication. Refer to Section [4] for information on programming the programmable outputs.

Zone response times are factory set at 500 ms. When programmed as *fast,* the zone response time will be 10 ms. When programmed as *slow,* the zone response time will be 500 ms.

Zone Definitions: Digit 2

Digit 2 determines the zone type as described below:

[0] Standard Delay: The Standard Delay Zone is normally used for Entry/Exit doors. The Exit Delay starts when the system is armed; the zone may be opened and closed during the delay without causing an alarm. When the Exit Delay expires, opening the zone will start the Entry Delay. During the Entry Delay, the keypad buzzer will sound to indicate that the system should be disarmed. If the system is disarmed before the Entry Delay expires, no alarm will be generated. Entry and Exit Delay times may be independently programmed for 1 to 255 seconds in Section [2].

[1] Instant: Instant Zones are normally used for door and window contacts. Instant Zones have the standard Exit Delay, but will generate an *instant* alarm when opened after the Exit Delay expires.

[2] Interior: Interior Zones are normally used with interior motion detectors and have the standard Exit Delay. The zone will also have the standard Entry Delay provided that a Delay Zone has been activated before the Interior Zone. If an Interior zone is tripped before a Delay zone, an alarm will be generated.

[3] Home-Away with Delay: Home-Away Zones operate similarly to Interior Zones with the following additional feature: if the system is armed and a Delay zone is not activated during the Exit Delay time, the Home-Away zones will be automatically bypassed. This feature allows the system to be armed with the Interior Zones automatically bypassed so that the user may remain on the premises.

If a Delay Zone is activated during the Exit Delay, the Entry Delay will be applied to Home-Away with Delay zones when the Exit Delay expires. If a Home-Away with Delay zone is then activated, the Entry Delay will be initiated. If a Home-Away with Delay zone is activated during the Entry Delay, that zone will follow the Entry Delay before generating an alarm if the system is not disarmed.

If the system is armed with the [*][9][Access Code] At-Home Arming Command, zones programmed as Home-Away with Delay will remain bypassed until the system is disarmed.

[4] 24-Hour Steady-Alarm: 24-Hour Steady-Alarm zones are active at all times and will sound an alarm even if the system is disarmed. When a 24-Hour Steady Alarm zone is activated, the bell or siren will sound with a steady tone. The alarm may be silenced by entering an Access Code on the keypad. These zones may be programmed as *silent* when a Programmable Output is enabled; refer to Programming Section [4] for information on setting Programmable Output options.

[5] 24-Hour Pulsed-Alarm: 24-Hour Pulsed-Alarm zones are active at all times and will sound an alarm even if the system is disarmed. When a 24-Hour Pulsed-Alarm zone is activated, the bell or siren will sound with a pulsing tone. The alarm may be silenced by entering an Access Code on the keypad. **NOTE:** 24-Hour Pulsed-Alarm zones should always be programmed as *audible* so the bell/siren output will be activated when an alarm is generated.

[2] System Times

Three system times are programmed in Section [2]; each time requires a 3-digit number. Do not press the [#] Key during data entry.

[1] Entry Delay (001 to 255 seconds) The Entry Delay is the amount of time permitted between the activation of a Delay Zone and the disarming of the system. If the system is not disarmed during this delay, an alarm will be generated. Refer to Section [1] for information on which zone definitions are affected by the Entry Delay. The default Entry Delay is 30 seconds.

[2] Exit Delay (001 to 255 seconds) The Exit Delay is the amount of time allowed to exit the premises after an Access Code is entered to arm the system. During the Exit Delay, a delay zone may be activated to leave the premises; when the Exit Delay expires, the system will be armed. Refer to Section [1] for information on which zone definitions are affected by the Exit Delay. The default Exit Delay is 120 seconds.

[3] Bell Cut-Off (001 to 255 minutes) This time determines how long the bell/siren will sound when an alarm is generated. When an alarm is generated, the bell/siren will sound for this length of time, or until the alarm is silenced by entering an Access Code. The default setting is 4 minutes.

[3] Installer's Code

The default setting for the Installer's Code is [0510]. It is strongly recommended that the Installer's Code be reprogrammed before installation is complete. Be sure to record the new Installer's Code for later reference.

[4] Programmable Output Options (PGM1 and PGM2 Terminals)

The PGM outputs can be programmed to operate in response to various system operations. The output pulse connects the PGM terminal to the negative power rail. Program two 1-digit numbers in Section [4]. The first number entered determines how the PGM1 terminal will operate; the second number entered determines how the PGM2 terminal will operate. ***Valid entries are from 1 to 9; do not enter 0.***

[1] Utility Output: When activated by entering [∗][7], the PGM output switches to ground for 5 seconds and the keypad buzzer will sound.

[2] Keypad Sounder Follow Mode: The PGM output switches to ground as long as the keypad sounder is ON. The PGM output will ***not*** be activated when the keypad sounder beeps for acknowledgement tones or for trouble indications.

[3] Latched Alarm Output: The PGM switches to ground after any alarm (***other*** than [F], [A] or [P] Key alarms) and remains switched to ground until an Access Code is entered or until the system is disarmed using the keyswitch. ***An Access Code must be entered or the keyswitch must be operated to clear the Latched Alarm Output,*** thus requiring the user to acknowledge an alarm. This output can also be used to indicate that an alarm has occurred before entering the premises.

[4] Steady Alarm / [P] Key: The PGM output switches to ground when there is a burglar alarm, a 24-Hour Steady alarm, or when the [P] Key is pressed. The PGM output will be activated until the Bell Cut-off time expires or until an Access Code is entered.

[5] 24-Hour Pulsed Alarm / [F] Key: The PGM output switches to ground when there is a 24-Hour Pulsed alarm or when the [F] Key is pressed. The PGM output will be activated until the Bell Cut-off time expires or until an Access Code is entered.

[6] [A] Key Alarm: The PGM output switches to ground when the [A] Key is pressed. The PGM output will remain activated until the Bell Cut-off time expires or until an Access Code is entered.

[7] Trouble Output: The PGM output switches to ground when a Trouble condition occurs. The PGM output will remain activated until the trouble condition is corrected.

[8] **[F], [A] and [P] Key Alarms:** The PGM output switches to ground when any of the keypad alarms are generated by pressing the [F], [A] or [P] Keys. The PGM output will be activated until the Bell Cut-off time expires or until an Access Code is entered.

[9] **Arm/Disarm Status:** The PGM is activated when the system is armed and remains activated throughout the armed period. When the system is disarmed, the PGM output will be deactivated.

[5] 1st System Option Code

When Section [5] is entered, the 4 Zone Lights will indicate which options are selected.

To select an option, press a number from [1] to [4]. If the light indicating the option was OFF, it will come ON; if the light indicating the option was ON, it will go OFF.

LIGHT		
[1]	ON =	Momentary-contact Keyswitch Arming
	• OFF =	Maintained-contact Keyswitch Arming
[2]	• ON =	[P] Key silent
	OFF =	[P] Key audible
[3]	ON =	KEY Terminal operates as Tamper Zone
	• OFF =	KEY Terminal used for Keyswitch Operation
[4]	• OFF =	***For Future Use***

• Factory default settings

Notes on [P] Key Operation

If the [P] Key is programmed as a silent alarm, it is suggested that one of the Programmable Outputs be programmed with Option 3, Option 4, or Option 8 so that an output is activated when the [P] Key is pressed. The Programmable Output may be used to activate special lighting or a bell or siren other than the one connected to the control panel.

If the [P] Key is not to activate a Programmable Output, do not program the [P] Key as a silent alarm. If enabled but not set to activate a Programmable Output or sound an alarm, no alarm will be generated when the [P] Key is pressed. Ensure that the user is made fully aware of how the [F], [A] and [P] Keys function on their system.

Notes on KEY Terminal Options

When Light [3] is ON, the KEY Terminal will function as a Tamper Zone.

When Light [3] if OFF (the default setting), the KEY Terminal will be used for Keyswitch Operation.

When used as a Tamper Zone, the KEY Terminal functions as a regular burglary zone. If PGM1 or PGM2 are programmed with Programmable Output Option [4] Burglar Alarm / [P] Key, the output will be activated if an alarm is generated on the KEY Terminal.

FOR THE RECORD

Customer _____

Address _____

_____

Phone _____ Installation Date _____

CONTACTS

Name _____ Phone _____

Name _____ Phone _____

Name _____ Phone _____

ZONE INFORMATION

Zone	***Type***	***Protected Area***
1	_____	_____
2	_____	_____
3	_____	_____
4	_____	_____

Entrance Delay _____

Exit Delay _____

Bell Cutoff _____

KEYPAD FUNCTIONS

[P] Key ☐ Audible ☐ Silent

NOTES

_____

_____

_____

_____

_____

_____

_____

_____

_____

_____

_____

PROGRAMMING WORKSHEET

[1] Zone Definitions Page 10

NOTE: When defining zones, assign delay zones first, then assign the other types.

Default			Digit 1	Digit 2
0 0		Zone 1	**[0]** Slow / Audible	**[0]** Standard Delay
0 1		Zone 2	**[1]** Slow / Silent	**[1]** Instant
0 2		Zone 3	**[2]** Fast / Audible	**[2]** Interior
0 2		Zone 4	**[3]** Fast / Silent	**[3]** Home-Away/Delay
				[4] 24-Hour Steady Alarm
				[5] 24-Hour Pulsed Alarm

[2] System Times Page 11

Default		
0 3 0		Entry Delay (seconds)
1 2 0		Exit Delay (seconds)
0 0 4		Bell Cut-off (minutes)

Valid entries are “001” to “255”; do not enter “000”.

[3] Installer’s Code Page 11

Default	
0 5 1 0	

[4] Programmable Output Options (PGM1 and PGM2 Terminals) Page 11

Enter two digits from the list below. The first digit entered determines how PGM1 will operate; the second digit entered determines how PGM2 will operate.

Default		
1 3		Programmable Output

Valid entries are from 1 to 9.
Do not enter 0.

[1]	[*][7] activates PGM
[2]	Keypad sounder follow mode
[3]	Latched alarm
[4]	Steady Alarm / [P] Key
[5]	24-Hour Pulsed Alarm / [F] Key
[6]	PGM activates on [A] Key alarm
[7]	PGM activates on Trouble alarm
[8]	PGM activates on any [F], [A] or [P] Key alarm
[9]	Arm / Disarm Status

[5] 1st System Option Code Page 12

Default			Zone Light ON	Zone Light OFF
OFF		Zone Light 1	Momentary Keyswitch Arming	Maintained Keyswitch Arming
ON		Zone Light 2	[P] Key silent	[P] Key audible
OFF		Zone Light 3	KEY Terminal: Tamper Zone	KEY Terminal: Keyswitch Operation
OFF		Zone Light 4	***For Future Use***	

HOOK-UP DIAGRAM

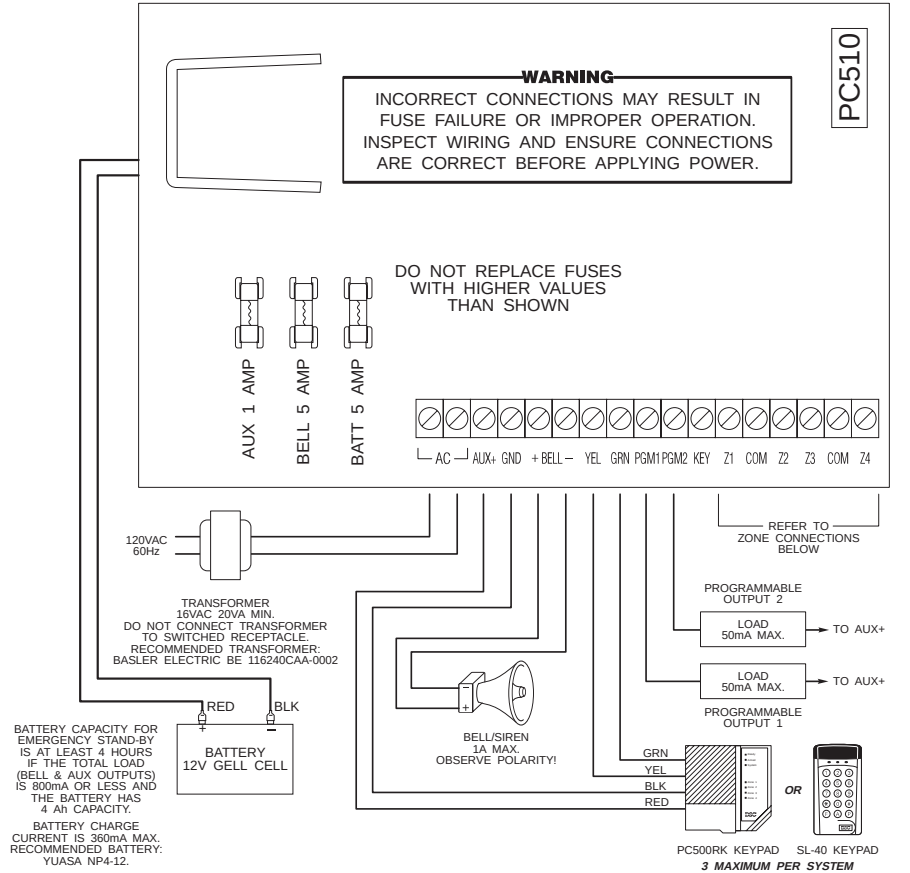

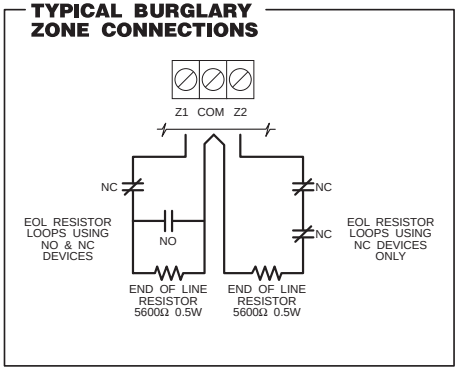

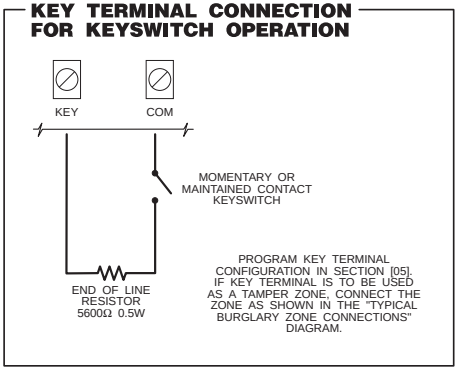

Recognized limited energy cable should be used. Observe local codes as defined by the authority having jurisdication.

Refer to Installation and Instruction Manuals for complete operating instructions.

Detection devices that require power from the Control Panel should operate over the range of 10.0 to 14.0 VDC.

The DSC BRAVO models are recommended motion detectors. The DSC DG-50 is a recommended glassbreak detector.

Temperature Range: 0˚C to 49˚C (32˚F to 120˚F). Maximum Humidity: 85% relative humidity

LIMITED WARRANTY

Digital Security Controls Ltd. warrants the original purchaser that for a period of twelve months from the date of purchase, the product shall be free of defects in materials and workmanship under normal use. During the warranty period, Digital Security Controls Ltd. shall, at its option, repair or replace any defective product upon return of the product to its factory, at no charge for labour and materials. Any replacement and/or repaired parts are warranted for the remainder of the original warranty or ninety (90) days, whichever is longer. The original owner must promptly notify Digital Security Controls Ltd. in writing that there is defect in material or workmanship, such written notice to be received in all events prior to expiration of the warranty period.

International Warranty

The warranty for international customers is the same as for any customer within Canada and the United States, with the exception that Digital Security Controls Ltd. shall not be responsible for any customs fees, taxes, or VAT that may be due.

Warranty Procedure

To obtain service under this warranty, please return the item(s) in question to the point of purchase. All authorized distributors and dealers have a warranty program. Anyone returning goods to Digital Security Controls Ltd. must first obtain an authorization number. Digital Security Controls Ltd. will not accept any shipment whatsoever for which prior authorization has not been obtained.

Conditions to Void Warranty

This warranty applies only to defects in parts and workmanship relating to normal use. It does not cover:

- damage incurred in shipping or handling;
- damage caused by disaster such as fire, flood, wind, earthquake or lightning;
- damage due to causes beyond the control of Digital Security Controls Ltd. such as excessive voltage, mechanical shock or water damage;
- damage caused by unauthorized attachment, alterations, modifications or foreign objects;
- damage caused by peripherals (unless such peripherals were supplied by Digital Security Controls Ltd.);
- defects caused by failure to provide a suitable installation environment for the products;
- damage caused by use of the products for purposes other than those for which it was designed;
- damage from improper maintenance;
- damage arising out of any other abuse, mishandling or improper application of the products.

Digital Security Controls Ltd.'s liability for failure to repair the product under this warranty after a reasonable number of attempts will be limited to a replacement of the product, as the exclusive remedy for breach of warranty. Under no circumstances shall Digital Security Controls Ltd. be liable for any special, incidental, or consequential damages based upon breach of warranty, breach of contract, negligence, strict liability, or any other legal theory. Such damages include, but are not limited to, loss of profits, loss of the product or any associated equipment, cost of capital, cost of substitute or replacement equipment, facilities or services, down time, purchaser's time, the claims of third parties, including customers, and injury to property.

Disclaimer of Warranties

This warranty contains the entire warranty and shall be in lieu of any and all other warranties, whether expressed or implied (including all implied warranties of merchantability or fitness for a particular purpose) And of all other obligations or liabilities on the part of Digital Security Controls Ltd. Digital Security Controls Ltd. neither assumes nor authorizes any other person purporting to act on its behalf to modify or to change this warranty, nor to assume for it any other warranty or liability concerning this product.

This disclaimer of warranties and limited warranty are governed by the laws of the province of Ontario, Canada.

WARNING: Digital Security Controls Ltd. recommends that the entire system be completely tested on a regular basis. However, despite frequent testing, and due to, but not limited to, criminal tampering or electrical disruption, it is possible for this product to fail to perform as expected.

Installer's Lockout

Any products returned to DSC which have the Installer's Lockout option enabled and exhibit no other problems will be subject to a service charge.

Out of Warranty Repairs

Digital Security Controls Ltd. will at its option repair or replace out-of-warranty products which are returned to its factory according to the following conditions. Anyone returning goods to Digital Security Controls Ltd. must first obtain an authorization number. Digital Security Controls Ltd. will not accept any shipment whatsoever for which prior authorization has not been obtained.

Products which Digital Security Controls Ltd. determines to be repairable will be repaired and returned. A set fee which Digital Security Controls Ltd. has predetermined and which may be revised from time to time, will be charged for each unit repaired.

Products which Digital Security Controls Ltd. determines not to be repairable will be replaced by the nearest equivalent product available at that time. The current market price of the replacement product will be charged for each replacement unit.

WARNING **Please Read Carefully**

Note to Installers

This warning contains vital information. As the only individual in contact with system users, it is your responsibility to bring each item in this warning to the attention of the users of this system.

System Failures

This system has been carefully designed to be as effective as possible. There are circumstances, however, involving fire, burglary, or other types of emergencies where it may not provide protection. Any alarm system of any type may be compromised deliberately or may fail to operate as expected for a variety of reasons. Some but not all of these reasons may be:

■ Inadequate Installation

A security system must be installed properly in order to provide adequate protection. Every installation should be evaluated by a security professional to ensure that all access points and areas are covered. Locks and latches on windows and doors must be secure and operate as intended. Windows, doors, walls, ceilings and other building materials must be of sufficient strength and construction to provide the level of protection expected. A reevaluation must be done during and after any construction activity. An evaluation by the fire and/or police department is highly recommended if this service is available.

■ Criminal Knowledge

This system contains security features which were known to be effective at the time of manufacture. It is possible for persons with criminal intent to develop techniques which reduce the effectiveness of these features. It is important that a security system be reviewed periodically to ensure that its features remain effective and that it be updated or replaced if it is found that it does not provide the protection expected.

■ Access by Intruders

Intruders may enter through an unprotected access point, circumvent a sensing device, evade detection by moving through an area of insufficient coverage, disconnect a warning device, or interfere with or prevent the proper operation of the system.

■ Power Failure

Control units, intrusion detectors, smoke detectors and many other security devices require an adequate power supply for proper operation. If a device operates from batteries, it is possible for the batteries to fail. Even if the batteries have not failed, they must be charged, in good condition and installed correctly. If a device operates only by AC power, any interruption, however brief, will render that device inoperative while it does not have power. Power interruptions of any length are often accompanied by voltage fluctuations which may damage electronic equipment such as a security system. After a power interruption has occurred, immediately conduct a complete system test to ensure that the system operates as intended.

■ Failure of Replaceable Batteries

This system's wireless transmitters have been designed to provide several years of battery life under normal conditions. The expected battery life is a function of the device environment, usage and type. Ambient conditions such as high humidity, high or low temperatures, or large temperature fluctuations may reduce the expected battery life. While each transmitting device has a low battery monitor which identifies when the batteries need to be replaced, this monitor may fail to operate as expected. Regular testing and maintenance will keep the system in good operating condition.

■ Compromise of Radio Frequency (Wireless) Devices

Signals may not reach the receiver under all circumstances which could include metal objects placed on or near the radio path or deliberate jamming or other inadvertent radio signal interference.

■ System Users

A user may not be able to operate a panic or emergency switch possibly due to permanent or temporary physical disability, inability to reach the device in time, or unfamiliarity with the correct operation. It is important that all system users be trained in the correct operation of the alarm system and that they know how to respond when the system indicates an alarm.

■ Smoke Detectors

Smoke detectors that are a part of this system may not properly alert occupants of a fire for a number of reasons, some of which follow. The smoke detectors may have been improperly installed or positioned. Smoke may not be able to reach the smoke detectors, such as when the fire is in a chimney, walls or roofs, or on the other side of closed doors. Smoke detectors may not detect smoke from fires on another level of the residence or building.

Every fire is different in the amount of smoke produced and the rate of burning. Smoke detectors cannot sense all types of fires equally well. Smoke detectors may not provide timely warning of fires caused by carelessness or safety hazards such as smoking in bed, violent explosions, escaping gas, improper storage of flammable materials, overloaded electrical circuits, children playing with matches or arson.

Even if the smoke detector operates as intended, there may be circumstances when there is insufficient warning to allow all occupants to escape in time to avoid injury or death.

■ Motion Detectors

Motion detectors can only detect motion within the designated areas as shown in their respective installation instructions. They cannot discriminate between intruders and intended occupants. Motion detectors do not provide volumetric area protection. They have multiple beams of detection and motion can only be detected in unobstructed areas covered by these beams. They cannot detect motion which occurs behind walls, ceilings, floor, closed doors, glass partitions, glass doors or windows. Any type of tampering whether intentional or unintentional such as masking, painting, or spraying of any material on the lenses, mirrors, windows or any other part of the detection system will impair its proper operation.

Passive infrared motion detectors operate by sensing changes in temperature. However their effectiveness can be reduced when the ambient temperature rises near or above body temperature or if there are intentional or unintentional sources of heat in or near the detection area. Some of these heat sources could be heaters, radiators, stoves, barbeques, fireplaces, sunlight, steam vents, lighting and so on.

■ Warning Devices

Warning devices such as sirens, bells, horns, or strobes may not warn people or waken someone sleeping if there is an intervening wall or door. If warning devices are located on a different level of the residence or premise, then it is less likely that the occupants will be alerted or awakened. Audible warning devices may be interfered with by other noise sources such as stereos, radios, televisions, air conditioners or other appliances, or passing traffic. Audible warning devices, however loud, may not be heard by a hearing-impaired person.

■ Telephone Lines

If telephone lines are used to transmit alarms, they may be out of service or busy for certain periods of time. Also an intruder may cut the telephone line or defeat its operation by more sophisticated means which may be difficult to detect.

■ Insufficient Time

There may be circumstances when the system will operate as intended, yet the occupants will not be protected from the emergency due to their inability to respond to the warnings in a timely manner. If the system is monitored, the response may not occur in time to protect the occupants or their belongings.

■ Component Failure

Although every effort has been made to make this system as reliable as possible, the system may fail to function as intended due to the failure of a component.

■ Inadequate Testing

Most problems that would prevent an alarm system from operating as intended can be found by regular testing and maintenance. The complete system should be tested weekly and immediately after a break-in, an attempted break-in, a fire, a storm, an earthquake, an accident, or any kind of construction activity inside or outside the premises. The testing should include all sensing devices, keypads, consoles, alarm indicating devices and any other operational devices that are part of the system.

■ Security and Insurance

Regardless of its capabilities, an alarm system is not a substitute for property or life insurance. An alarm system also is not a substitute for property owners, renters, or other occupants to act prudently to prevent or minimize the harmful effects of an emergency situation.

1-800-387-3630

©1997, 2002 Digital Security Controls Ltd.

Toronto, Canada

Printed in Canada 29000864 R1